msr_0444_Net_Media_Center:Layout 1 3/7/2008 3:23 PM Page 1

Net.Media Center

PRODUCT MANUAL

Structured Cabling Solutions

*Premium**Products** • Proven**Performance** • Competitive**Prices***

ICRESDC14E • ICRESDC21E

ICRESDC28E • ICRESDC42E

Package Content

Contenido

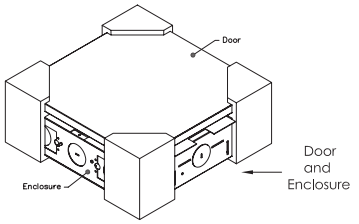

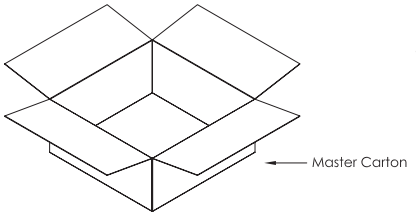

All Net.Media Centers include the following components in its package: (Note: ICRESDC14E is shown for illustration purposes).

Todos los Net.Media Centers incluyen los siguentes componentes: (Nota: ICRESDC14E se encuentra ilustrado).

1. Door Package Includes:
- One (1) Door Assembly with hinge, latch, and logo
- *Un (1) conjunto de puerta con bisagra, picaporte, y logo*

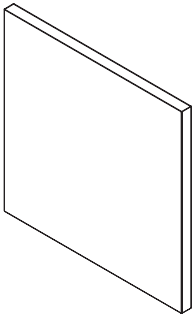

Bagged Items/Contenido en bolsa:
- Two (2) Door Screws
- *Dos (2) Tornillos para puerta*
- Two (2) Rubber Bumpers
- *Dos (2) Bumpers de cuacho (ULE)*
- Four (4) Fasteners
- *Cuatro (4) Cierres*

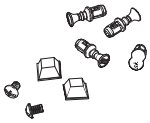

2. Enclosure Package includes:
- One (1) Enclosure
- *Una (1) caja*
- One (1) Protective Cover
- *Una (1) cubierta protectora*

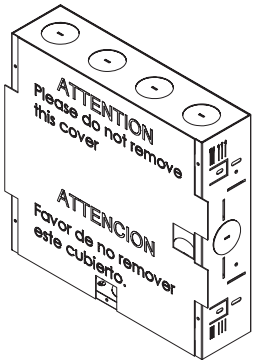

Bagged Items/Contenido en bolsa:
- Four (4) Rubber Grommets
- *Cuatro (4) Ojales de cuacho*
- Four (4) Mounting Screws
- *Cuatro (4) Torinillos de Montar*

Features
Characteristicas

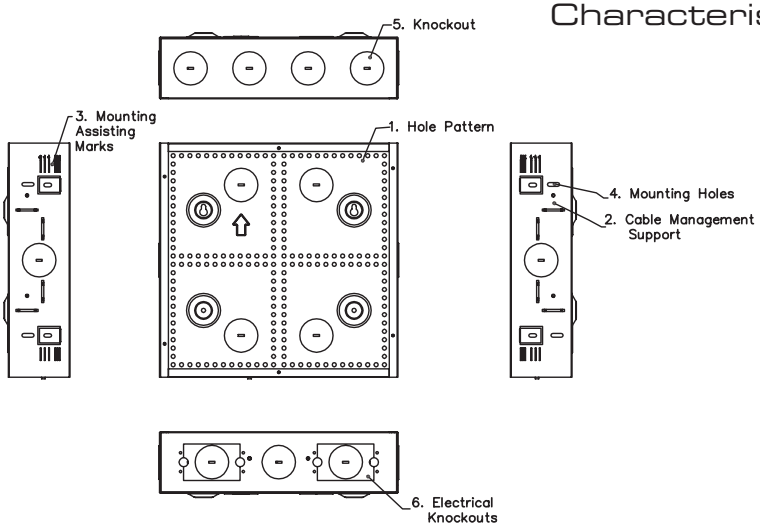

1. Hole Pattern
Can be used to mount equipment vertically or horizontally for maximum accommodations.

2. Cable Management Support:
Organize and route cable along the sides of the enclosure for a clean appearance using items ICCMSCMPR1 or ICCMSCMPR2. (sold separately) (Note: It is recommended to use only one side of the enclosure when mounting the Cable Management Rings. Cable Management Rings sold separatly).

3. Mounting Assistance Marking:
Assist in determining the mounting distance the enclosure needs to be mounted from the finished wall. Markings indicate drywall/sheetrock thickness. Enclosure shall be aligned with the wood or metal studs accordingly prior to drywall/sheetrock application.

4. Mounting Holes
Mounting holes are found along the sides of the enclosure that suit different mounting configurations

5. Knockouts:
Knockouts are convenently placed on all sides of the enclosure for cable management.

6. Electrical Knockout:
A set of electrical knockouts are located at the bottom of the enclosure for mounting up to 4 electrical outlets.

1. Serie de Hoyos
Puede montar modulos vertical y horizontal para accomdar el maximo en la caja.

2. Anillos para Manejar Cable:
Organize y dirija cable sobre las orillas de la caja para obtener una installation limpia y presentadora.
(Nota: Se recomienda usar un lado de la caja para instalar los Cable Management Rings. Cable Management Rings se venden separados).

3. Marcas en Asistencia Para Montar
Assisten para montar la caja dependiendo el grosor de la pared desiada. La caja se debe alianar con las marcas de montar y los postes de madera or metal.

4. Hoyos para montar
Hoyos de montar se encuentran a los lados de la caja para montar la caja dependiendo la configuracion usada.

5. Knockouts
Knockouts se encuentran por los lados de la caja para organizar cable.

6. Knockout Electricas
Un par de Knockout Electricas se encuentran en la parte bajade de la caja para instalar 4 enchifes electricos.

Installation
Instalacion

STEP 1

Remove the enclosure from the master carton.
NOTE: Store the door package in a safe location to prevent loss or damage if not being installed right away.

Remueve la caja de su carton.
NOTA: Guarde la puerta en un lugar seguro para prevenir perdida y daños si no es instalada imediatamente.

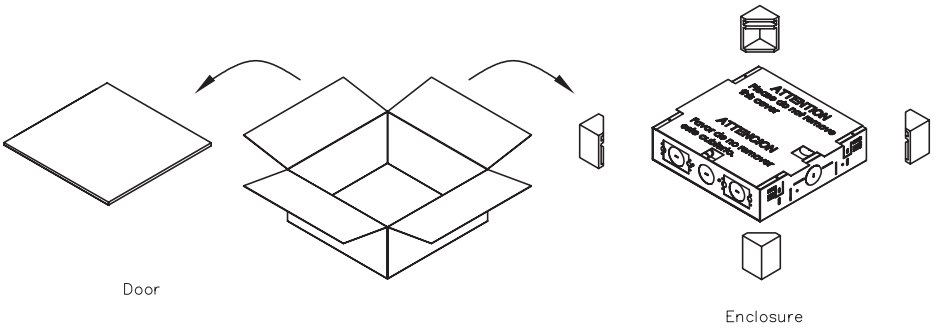

STEP 2

A. Remove the Protective Cover, but **DO NOT** discard the cover.

*Remueva la cubierta protectora pero **NO** la deseche.*

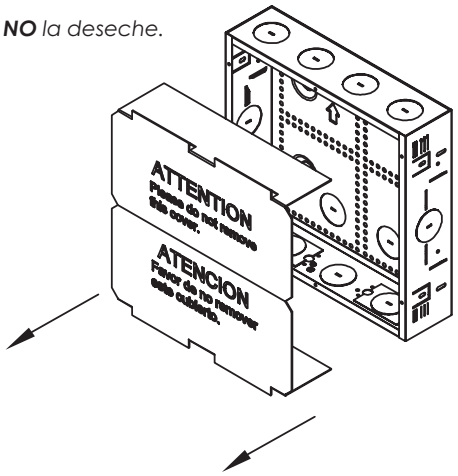

STEP 3

A. Determine the amount of knockouts to be used.
B. Remove the knockouts that will be used from the top, bottom, and sides of the enclosure.
C. Use a flat head screwdriver to remove the knockout.
D. Insert the rubber grommets in the knockout opening to protect cables from being damaged.

A. Determine cuantos knockouts se van a usar.
B. Remueve los knockouts de arriba, abajo, y los lados de la caja.
C. Use un destornillador para remover los knockouts.
D. Instale los ojales de cuacho para protejer el cable de daños.

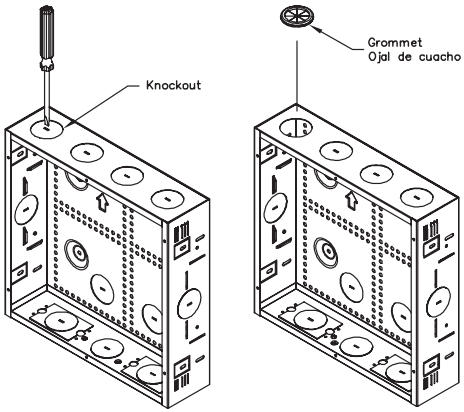

STEP 4

A. Determine the thickness of the drywall application.

A. Determine el grosor del drywall.

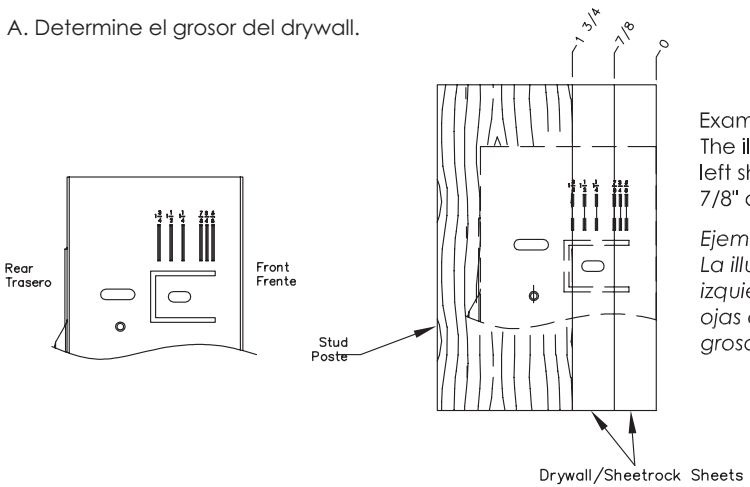

Example:
The illustration to the left shows two (2) 7/8" drywall sheets.

Ejemplo:
La illustracion a la izquierda muestra dos ojas de drywall con grosor de 7/8"

Installation
Instalacion

STEP 5

A. After determining the thickness of the drywall, mount the enclosure between the studs and secure the enclosure with the mounting screws provided in the desired position.

A. Despues de determinar el grosor del drywall, monte la caja entre los postes y segure la caja con los tornillos

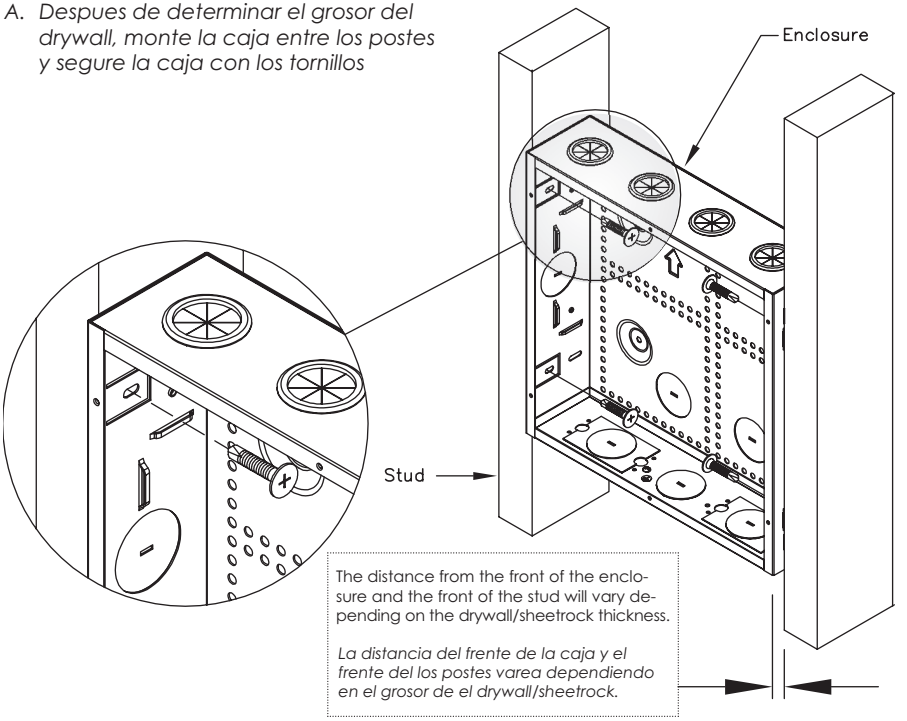

ATTENTION: It is NOT recommended to bend out the tabs to mount the enclosure.

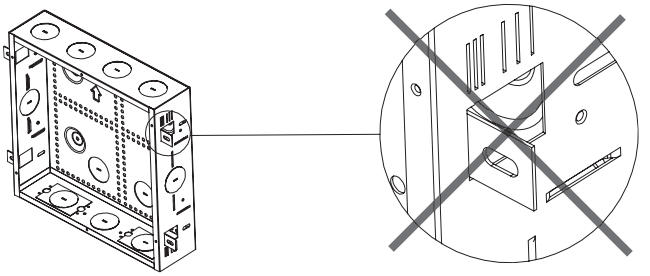

STEP 6

A. After securing the enclosure between studs, place the protective cover back onto the enclosure. The protective cover helps maintain the enclosure clean and free of debris during the rest of the installation.
B. Install the drywall. The drywall application should be flush with the front of the enclosure.

A. Despues de aseguar la caja enter postes, remplace la cubierta proterectora para protejer la caja de suciedad y escombros.
B. Instale el drywall. El drywall debe estar al nivel de el frente de la caja.

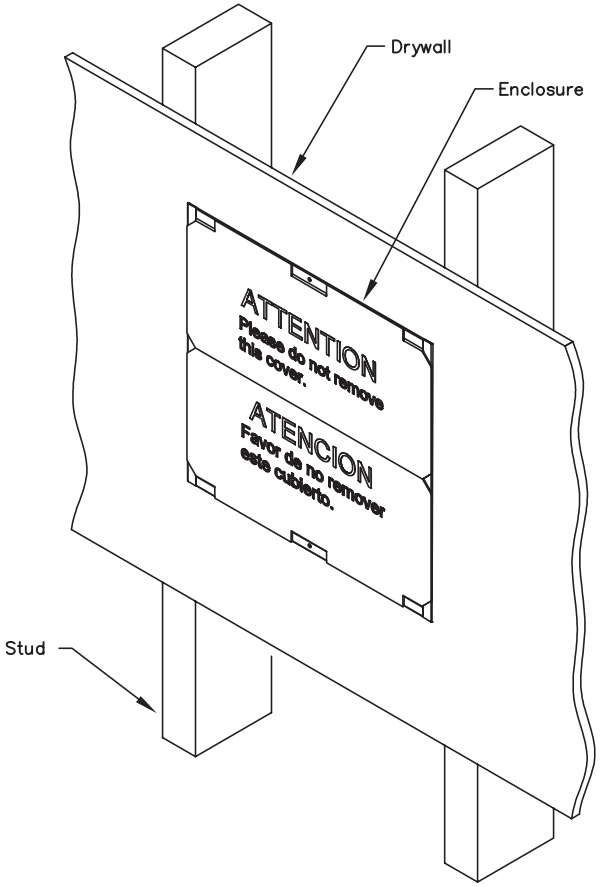

Installation
Instalacion

Surface Mounting

A. Remove the enclosure from the master carton
B. Remove the protective cover but do not discard the cover.
C. Remove the knockouts that will be used.
D. Install the required grommets.
E. Position the enclosure in the desired location on the wall.
F. Use the provided mounting screws to secure the enclosure with the surface.

A. Remueva la caja de su carton.
*B. Remueva la cubierta protectora pero **NO** la deseche.*
C. Remueva los knockouts de arriba, abajo, y los lados de la caja
D. Instale lo cuachos
E. Posicione la caja en el lugar deseado sobre la pared.
F. Segure la caja con la pared usando los tornillos.

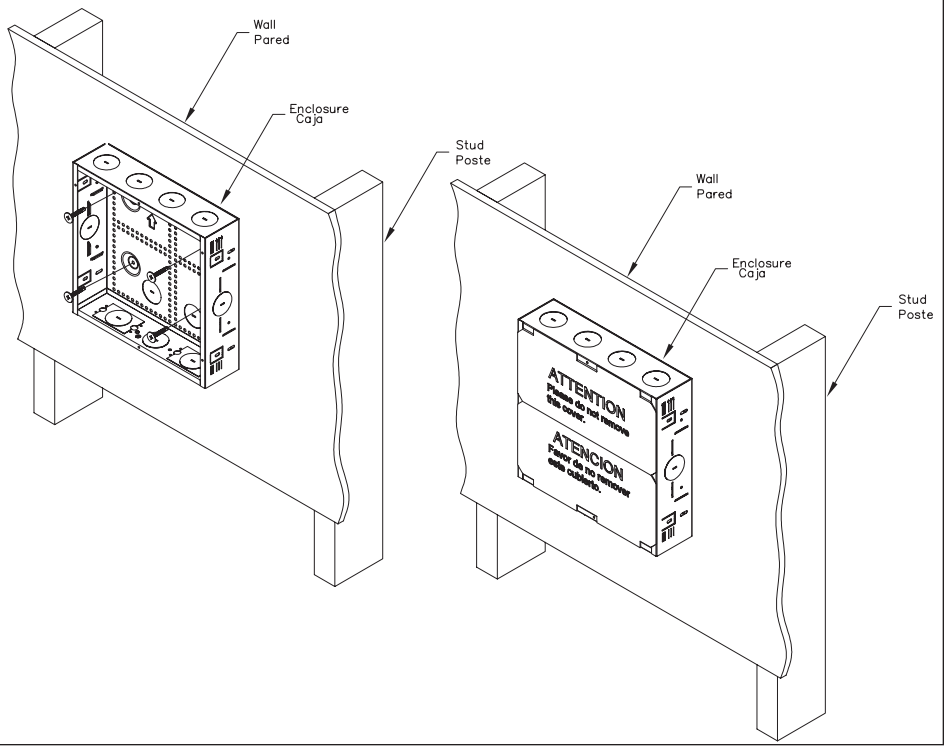

STEP 7

A. Remove the door from its packaging carton. Make sure all of the bagged hardware is included in the carton.

A. Remueve el conjuto de la puerta de su carton. Asegura de que todo el contenido esta en su bolsa.

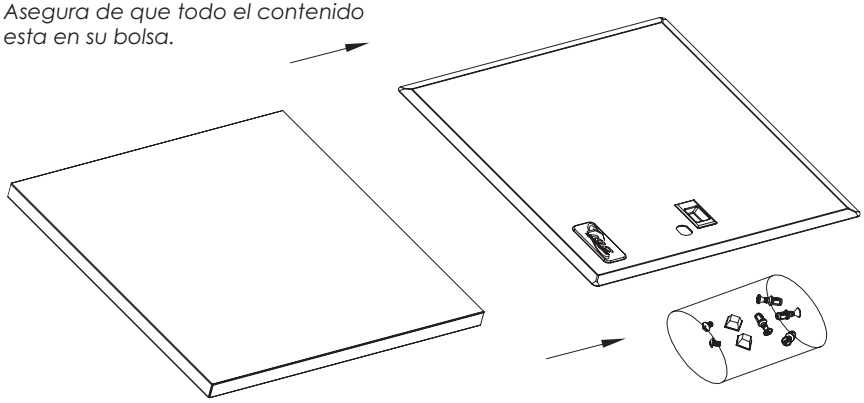

STEP 8 (If Required)

A. If the door requires to have a security lock installed, install the lock in the position shown below. If lock is not required proceed to install the door on the enclosure.
NOTE: Lock sold separately.

A. Si se require instalar una cerradura de seguridad, instale la cerradura como es illustrada.
NOTA: La cerradura se vende separada.

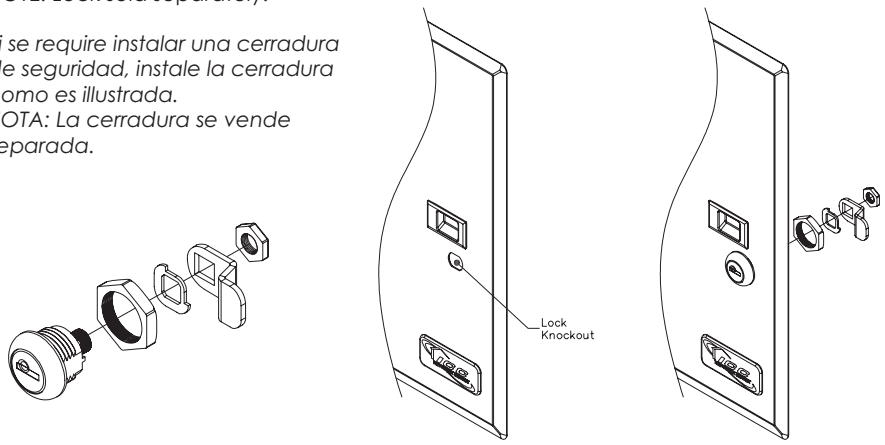

Installation
Instalacion

STEP 9

A. Remove the protective cover.
B. Screw the two (2) door screws on the enclosure, but do not tighten the screws completely.
C. Install the door as shown
D. Tighten the screws complete to secure the door with the enclosure.
E. Install the rubber bumpers as shown.

A. Remueva la cubierta protectora.
B. Atornille los dos (2) tornillos de la puerta en la caja pero no atornille los tornillos completamente.
C. Instale la puerta como es illustrada.
D. Atornille completamente los tornillos de la puerta para asegurar la puerta con la caja.
E. Instale los bumpers de coacho como es illustrado.

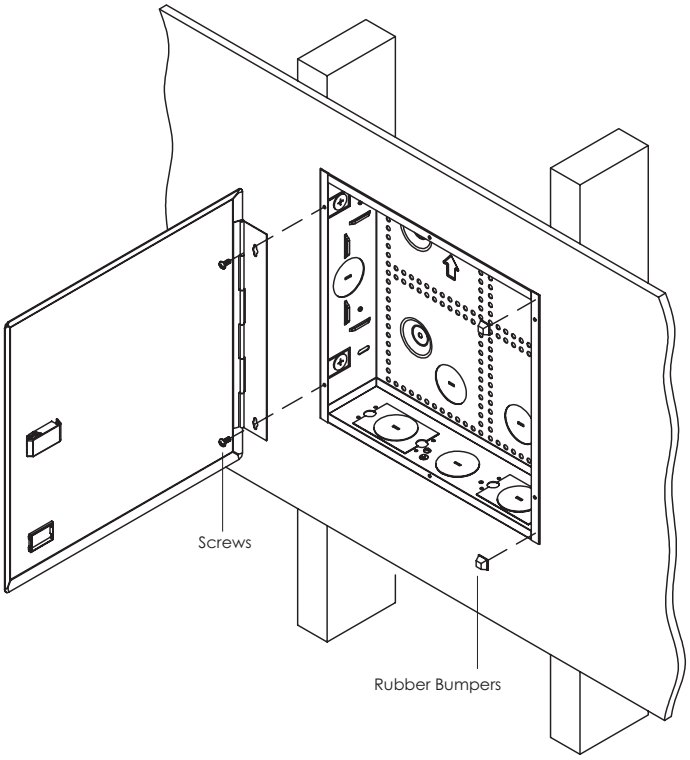

Accessories
Accesorios

Additional accessories can be purchased separately to enhance installation of residential enclosure.

Accesorios adicionales se vender separado para aumentar el maximo uso de su caja residencial.

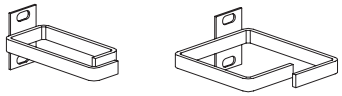

Cable Management Ring
ICCMSCMPR1 & ICCMSCMPR2

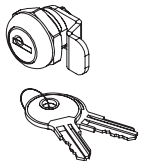

Door Lock
ICRDSDC2LK

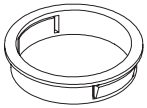

Plastic Grommets
ICRESDCAC3

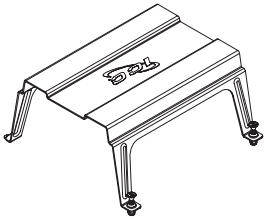

Cable Management Cover
ICRESCMC06

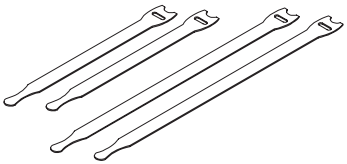

Velcro Cable Ties
ICACSV08XX - 8"
ICACSV12XX - 12"

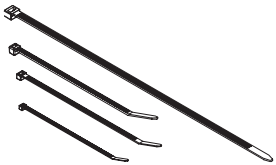

Nylon Cable Ties
ICACSSXXNL
ICACSMXXNL
ICACSLXXNL
ICACSAE15L

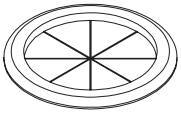

Rubber Grommets
ICRDSDCAC2

msr_0444_Net_Media_Center:Layout 1 3/7/2008 3:24 PM Page 12

Structured Cabling Solutions

*Premium**Products** • Proven**Performance** • Competitive**Prices***

CUSTOMER CARE / TECHNICAL SUPPORT • CSR@ICC.COM / 888-ASK-4-ICC (275-4422)
ICC.COM

Residential Cabling Solutions

8-Port Telephone Module with RJ31X Jack

INSTALLATION INSTRUCTIONS

Telephone Module with RJ31X Jack

ICC's Telephone Module with RJ31X Jack is an 8-port bridged telephone solution. The module offers a 110 IDC input and an expansion jack for additional connectivity. It supports up to 8 telephone outlets for phone, fax, modem devices, and has access up to 4 incoming phone lines.

ICRESVPA3C

INCLUDES:

- A 8-Port Telephone Module with RJ31X Jack, **1 piece**
- B Fasteners, **4 pieces**

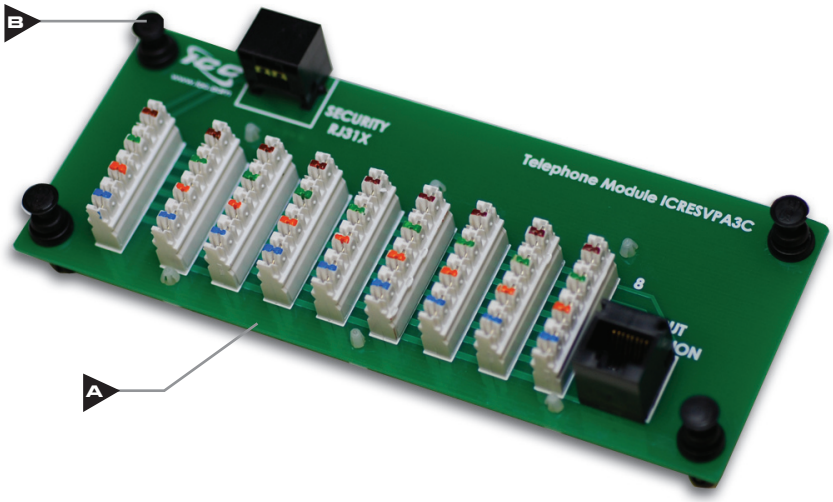

ASSEMBLY INSTRUCTIONS

Step 1.

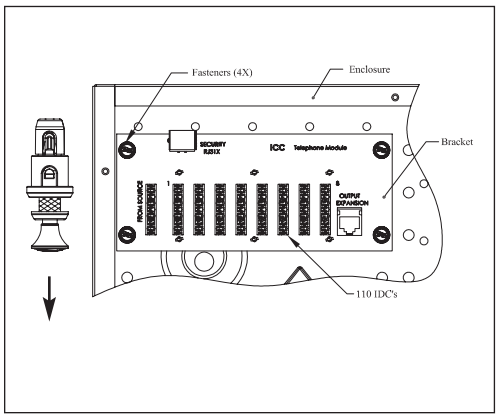

1. Place module horizontally and align fasteners with the peg board. Make sure the fasteners are NOT in locked positions.

Step 2.

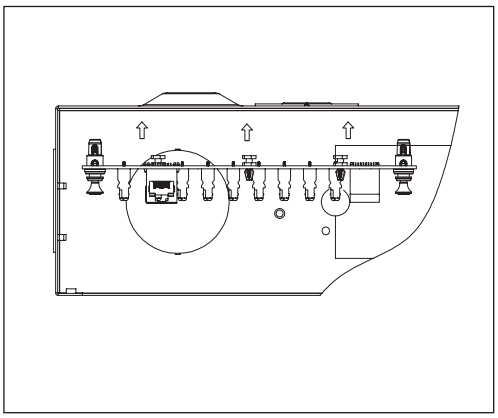

2. Push the module so that the fasteners goes into the peg board of the enclosure.

Step 3.

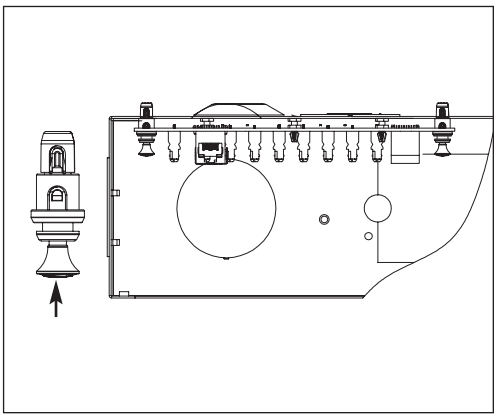

3. Once the module bracket is in the desired location, push the fasteners to their lock position.

CUSTOMER CARE / TECHNICAL SUPPORT • CSR@ICC.COM / 888-275-4422 (ASK-4-ICC)

16800 Edwards Road, Cerritos CA 90703 • 562-356-3111 • Fax 562-356-3100

© Copyright 2007, ICC. ICC and ICC logo are registered trade name and trademark. All rights reserved.

MSR-0432-2 rev A

ASSEMBLY INSTRUCTIONS

Step 4.

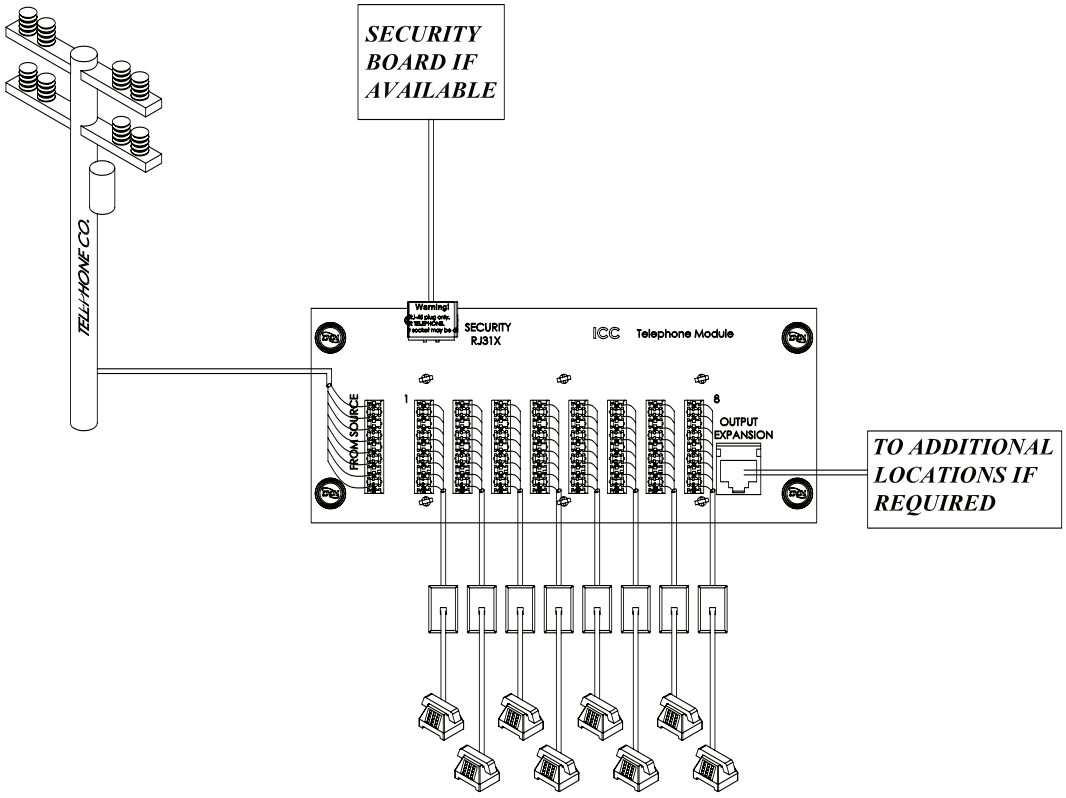

Fig 4.
Telephone Module With RJ31x Setup

Wiring a 110 Connector

1. Strip 2" of cable jacket.
2. Untwist about 0.5" wire and keep jack close to 110 connector
3. According to the color code only use a 110 punch down tool to push the wire between the contact blades. Or wire may be damaged when using other tools.

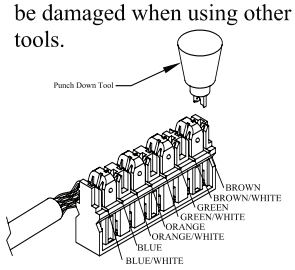

Fig 4.
Wiring

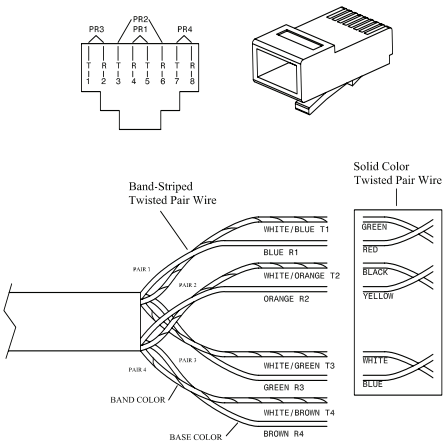

Fig 5.
RJ-45 Jack

4. Connect the incoming phone line to the 110 IDC labeled “From Source.” Use a 110 punch down tool to terminate each wire between contact blades. Identify each outlet cable and connect to 110 block labeled “To Location.” Punch down twisted pairs depending on which lines are desired to be activated at each location.

NOTE: Line#1 = Blue, Line#2 = Orange, Line#3 = Green, Line#4 = Brown
Example: Each 110-block represents one location. If you want to activate Line#1 at Location#1, simply punch down the twisted pair (White Blue/Blue) to the first 110-block. If you want to use a 2-line phone (Line#1 & Line#2) at Location#1, simply punch down twisted pairs (White Blue/Blue & White Orange/Orange) to the first 110-block to support 2-line phone.

WIRE INSTALLATION: For 110 IDC connector, follow the wire color-code and only use the 110 punch-down tool to terminate the wire between the contact blades.

RJ-45 Jacks: Phone and data lines are wired according to the TIA T-568-A standard.

Residential Cabling Solutions

Deluxe Series Video Splitter Modules

INSTALLATION INSTRUCTIONS

Video Splitter Modules

2 GHz Video Splitters can support up to eight locations, offering a choice of 4, 6, or 8-ports, and are designed for installation in ICC's Net.Media Centers. The Video Splitters receive and distribute CATV, antenna, satellite, or modulated video signals up to eight analog or digital television sets.

ICRESAV42L
ICRESAV62L
ICRESAV82L

INCLUDES:

- A 2 GHz Video Splitter, **1 piece**
- B Fasteners, **4 pieces**

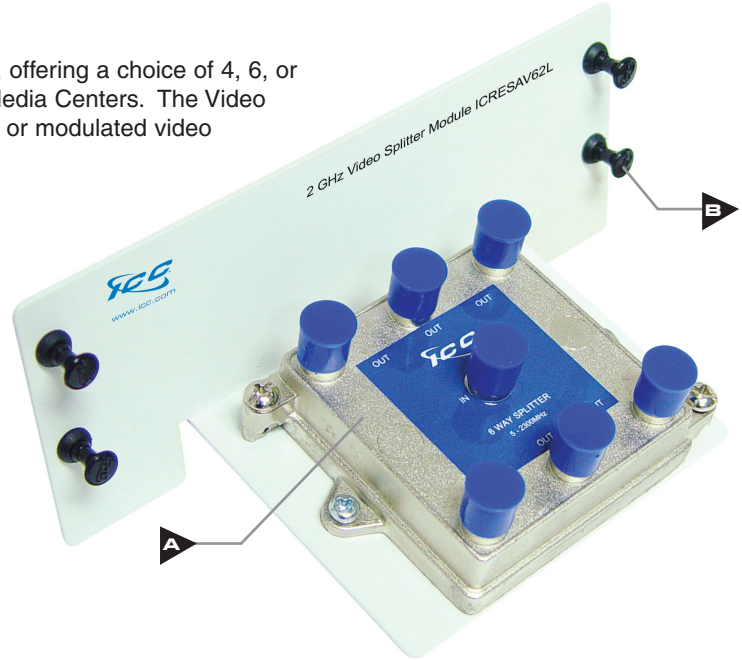

ASSEMBLY INSTRUCTIONS

Step 1.

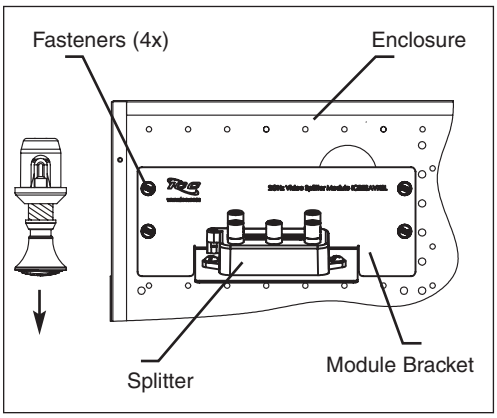

1. Place module horizontally and align fasteners with the peg board. Make sure the fasteners are NOT in locked positions.

Step 2.

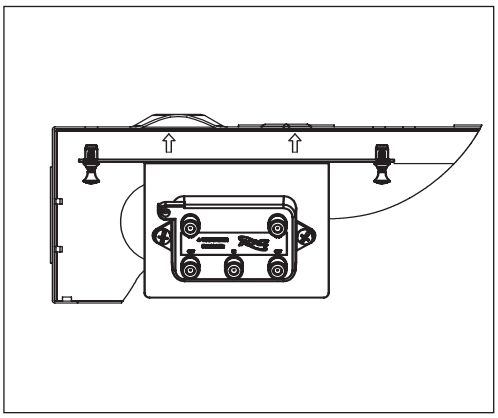

2. Push the module so that the fasteners goes into the peg board of the enclosure.

Step 3.

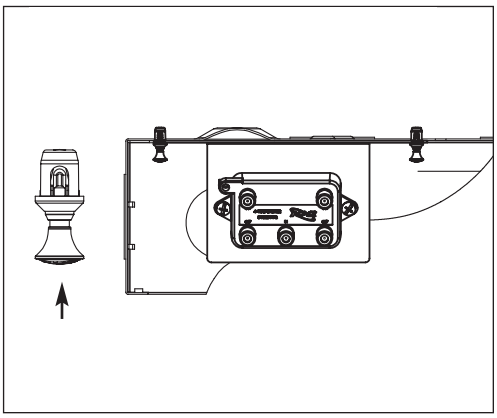

3. Once module bracket is in the desired location, push the fasteners to their lock position.

CUSTOMER CARE / TECHNICAL SUPPORT • CSR@ICC.COM / 888-275-4422 (ASK-4-ICC)

16800 Edwards Road, Cerritos CA 90703 • 562-356-3111 • Fax 562-356-3100

© Copyright 2006, ICC. ICC and ICC logo are registered trade name and trademark. All rights reserved.

MSR-0411-2 REV C

ASSEMBLY INSTRUCTIONS

Step 4.

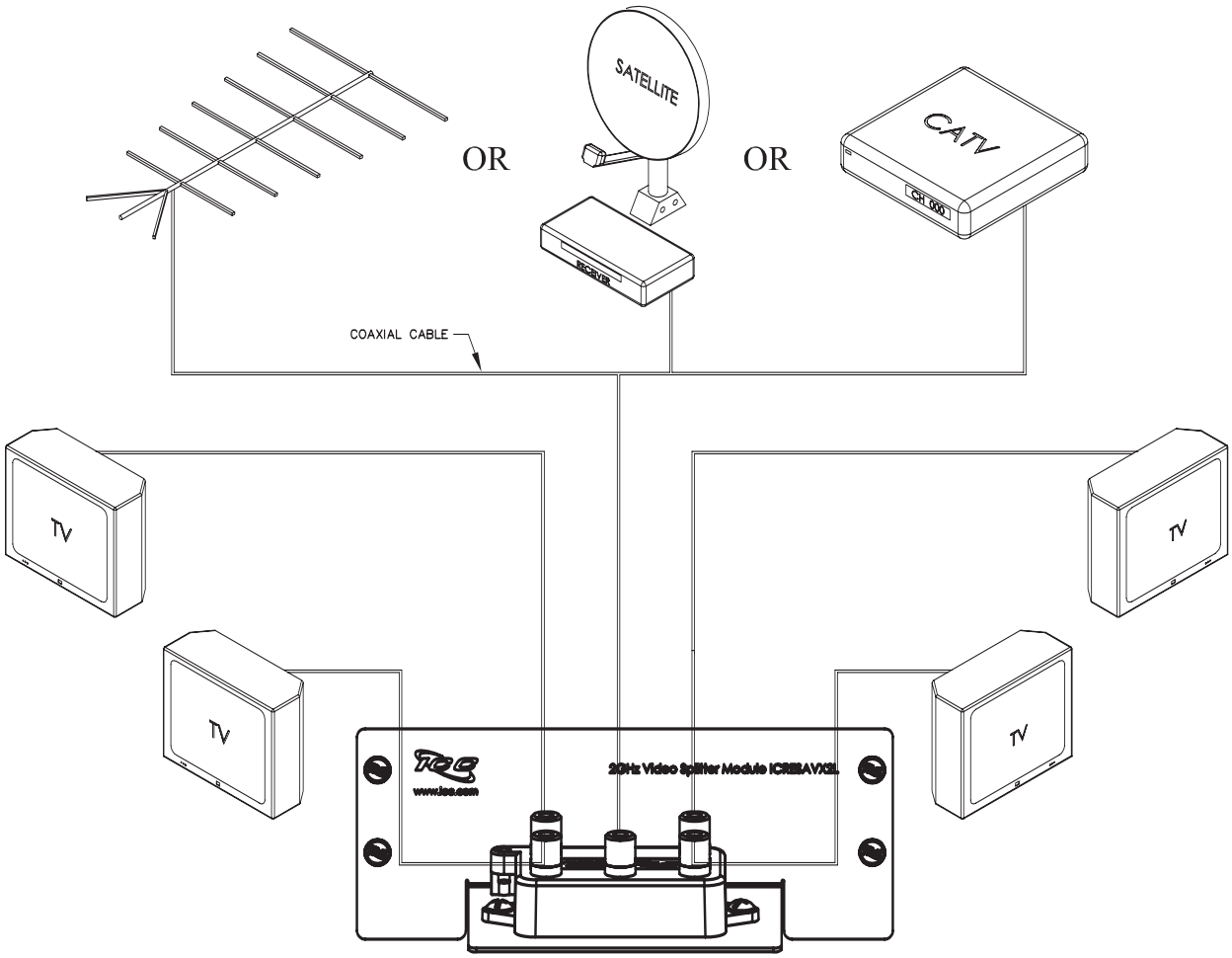

FIG 3.
Video Splitter Setup

ALSO AVAILABLE

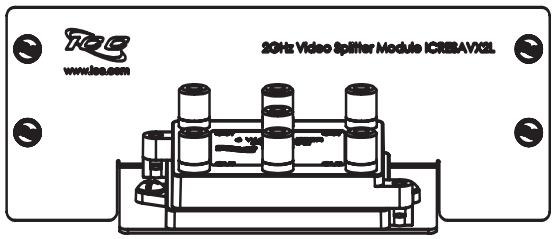

2 GHz 1 X 6 Video Splitter Module - ICRESAV62L

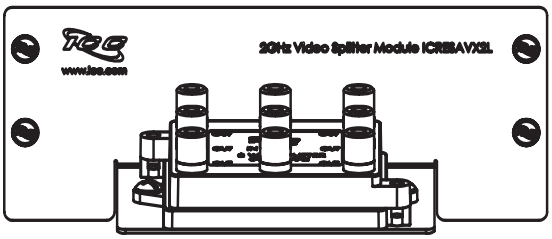

2 GHz 1 X 8 Video Splitter Module - ICRESAV82L

4. Prepare an incoming coaxial cable and outgoing coaxial cable by using ICC's coax cable stripper tool (ICACSCSCTV), All-in-One Universal Compression tool (ICACSCT01U), and F-type compression connectors (ICRDSAV01F for RG-6, and ICRDSAV04F for RG-6 Quad-Shield). Connect the incoming cable to the "IN" port of the splitter and the outgoing coaxial cables to the "OUT" ports. The "OUT" ports route the video signal to each location.