Residential Cabling Solutions

Telephone Expansion Module

INSTALLATION INSTRUCTIONS

Telephone Expansion Module

ICC's Telephone Expansion Module is an 8-port bridged telephone solution. This module offers a 8P8C input and an expansion jack for additional connectivity. It supports up to 8 telephony outlets for phone, fax, modem devices, and has access up to 4 incoming phone lines. Available in these different styles: Premier, Deluxe and Compact

This installation instruction is designed for the following part numbers:

ICRESVPB1C
ICRESVPB2C
ICRESVPB3C

INCLUDES:

- A 8-Port Telephone Expansion Module, **1 piece**
- B Fastener, **4 pieces**

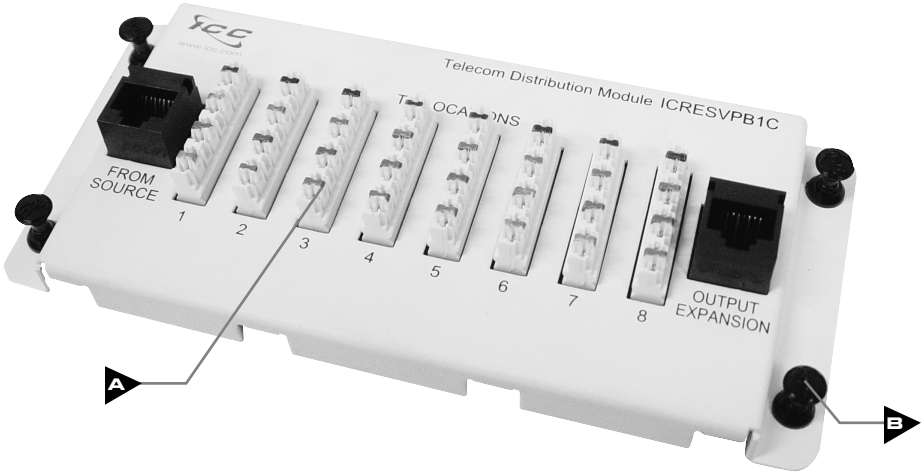

ASSEMBLY INSTRUCTIONS

Step 1.

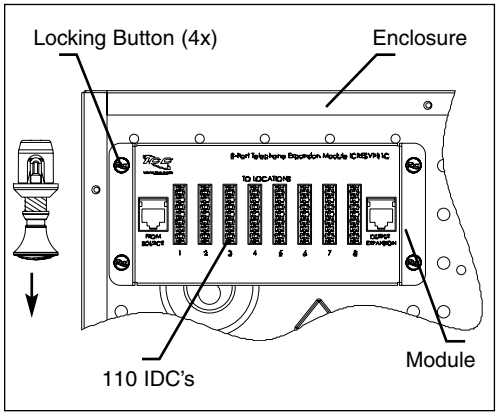

1. Place module horizontally and align fasteners with the enclosures peg board. Make sure the fasteners are NOT in locked positions.

Step 2.

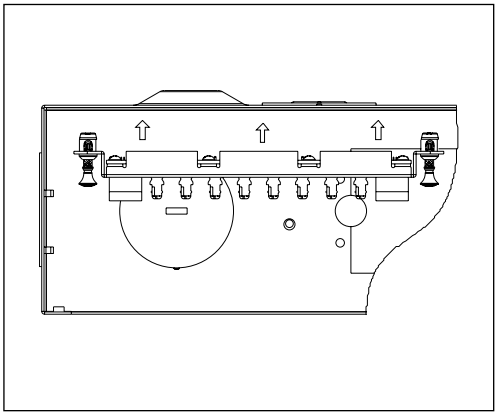

2. Push the module so that the fasteners go into the peg board of the enclosure.

Step 3.

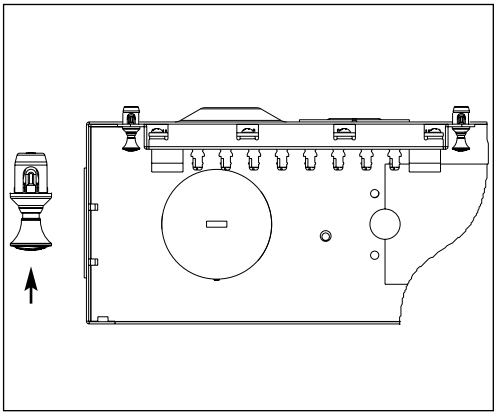

3. Once module bracket is in the desired location, push the fasteners to the locked position.

CUSTOMER CARE / TECHNICAL SUPPORT • CSR@ICC.COM / 888-275-4422 (ASK-4-ICC)

www.icc.com

© Copyright 2008, ICC. ICC and ICC logo are registered trade name and trademark. All rights reserved. 0208

MSR-0411-4 REV B

ASSEMBLY INSTRUCTIONS

Step 4.

TELEPHONE EXPANSION MODULE

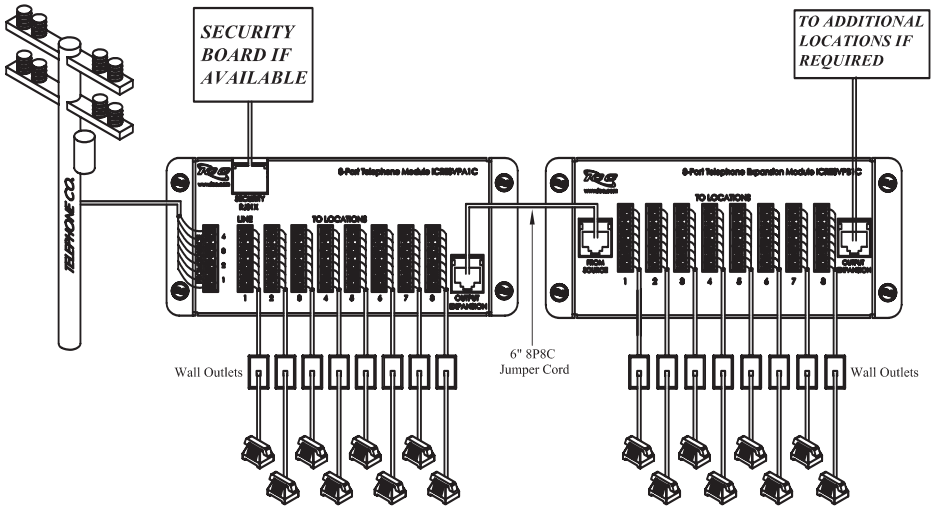

Fig 3.
Telephone Module With RJ31x & Telephone Module With Expansion Jack Setup

Wiring a 110 Connector

1. Strip 2" of cable jacket.
2. Untwist about 0.5" wire and keep jack close to 110 connector
3. According to the color code only use a 110 punch down tool to push the wire between the contact blades. Or wire may be damaged when using other tools.

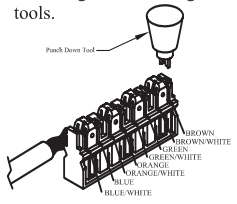

Fig 4.
Wiring

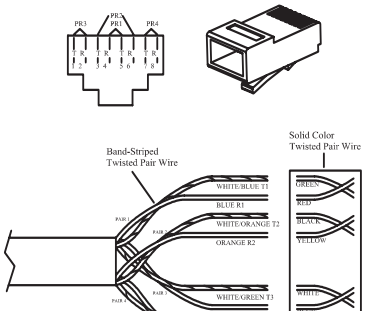

Fig 5.
RJ-45 Jack

4. Connect the telephone expansion board to the Telephone Module with the included 6” 8P8C jumper cord. Use a 110 punch down tool to terminate each wire between contact blades. Identify each outlet cable and connect to 110 block labeled “To Locations.” Punch down twisted pairs depending on which lines are desired to be activated at each location.

NOTE: Line#1 = Blue, Line#2 = Orange, Line#3 = Green, Line#4 = Brown
Example: Each 110-block represents one location. If you want to activate Line#1 at Location#1, simply punch down the twisted pair (White Blue/Blue) to the first 110-block. If you want to use a 2-line phone (Line#1 & Line#2) at Location#1, simply punch down twisted pairs (White Blue/Blue & White Orange/Orange) to the first 110-block to support 2-line phone.

WIRE INSTALLATION: For 110 IDC connector, follow the wire color-code and only use the 110 punch-down tool to terminate the wire between the contact blades.

RJ-45 Jacks: Phone and data lines are wired according to the TIA T-568-A standard.

Also available

Deluxe

ICRESVPB2C

Compact

ICRESVPB3C